WL112222H | PRODUCT DATA SHEET

LOMOND FAMILY TOILET SEAT





KEY FEATURES & BENEFITS

Stick'n'Lock™



SPECIFICATION

Materials	• Lid & Ring: Polypropylene (PP) • Hinge Pin: Stainless Steel • Hinge Base: Nylon
Colours	• Lid & Ring: White • Cover Caps: Brushed Stainless Steel
Dimensions	• Main Seat: 48mm(H) x 371mm(W) x 444mm(D) • Child Seat: 31.5mm(H) x 293mm(W) x 396mm(D)
Weight	• 1.46kg
Features	• Made from resilient polypropylene • Adjustable hinges fit standard oval toilet pans • Durable nylon hinges with stainless steel covers • Soft close action • Quick release for easy cleaning • Anti-bacterial treated product • Top and bottom fix • Additional magnetic removable child seat • All fittings included - no tools required

Tel: +44 (0) 1264 365881
Fax: +44 (0) 1264 356437
Email: info@croydex.co.uk
Web: www.croydex.com

Printed material, designs and packaging are protected by copyright and design right.

LINE DRAWING

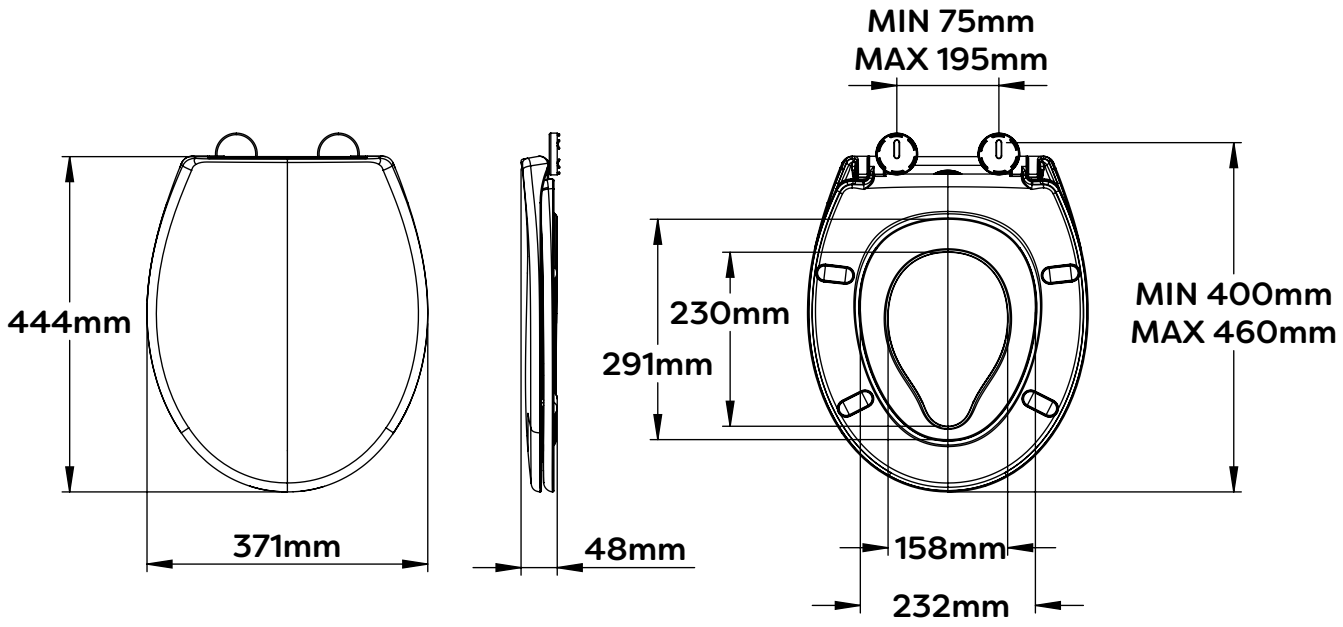

***The adjustable hinges on the toilet seat are suitable for use with BS EN 33 compliant WC pans. BS EN 33 fixing hole centres are between 145mm and 165mm.**

ALL DIMENSIONS ARE NOMINAL

SPECIFICATION

Standards	• Minimum grade 9 when assessed using BS EN ISO 10289 after 48 hours Neutral Salt Spray (NSS) testing in accordance with BS EN ISO 9227
Applications	• Domestic
Product Care	• Clean surfaces with a damp cloth and wipe dry using a soft cloth • Do not use chemical or abrasive cleaners as these may damage the surface finish
Guarantee	• Consumer Statutory Rights Apply